U.S. Department
of Transportation

**Pipeline and Hazardous
Materials Safety
Administration**

1200 New Jersey Avenue, SE
Washington, D.C. 20590

MAY 19 2016

Mr. Gary Rohn
HDI Gauges
Electrical Engineer
4130 Directors Row
Houston, TX 77092

Ref. No.: 15-0185

Dear Mr. Rohn:

This is in response to your e-mail dated September 11, 2015 requesting clarification of the Hazardous Materials Regulations (HMR; 49 CFR Parts 171-180 applicable to the selection of the most appropriate proper shipping name for lithium batteries. You state that you ship "battery packs" containing lithium metal batteries in two separate configurations using either two commercially available D batteries or one DD battery. You ask if the battery packs are most appropriately classified as UN 3090, "Lithium metal batteries" or as UN 3091, "Lithium metal batteries, contained in equipment."

The battery packs you reference in your e-mail are most appropriately classified as UN 3090, "Lithium metal batteries." The introductory paragraph to § 173.185 states that "equipment means the device or apparatus for which the lithium cells or batteries will provide electrical power for its operation." Based on the information you have provided, it is the opinion of this Office that your battery packs are offered independently from any other device to which they provide electrical power, and are most appropriately described as UN 3090, "Lithium metal batteries."

I trust this information is helpful. If you have further questions, please do not hesitate to contact this office.

Sincerely,

Duane A. Pfund

Duane A. Pfund
International Standards Coordinator
Standards and Rulemaking Division

Webb
§ 175.185
Batteries
15-0185

Dodd, Alice (PHMSA)

From: Geller, Shelby CTR (PHMSA)
Sent: Friday, September 11, 2015 3:39 PM
To: Hazmat Interps
Subject: FW: UN3090 vs. UN3091
Attachments: B004_RevG sht1.pdf; B004_RevG sht2.pdf; B004_RevG sht3.pdf; E260_revG.PDF; TADIRAN SPEC for D Size.pdf; er-34615 for DD size.pdf

Dear Shante and Alice,

Forwarded is a request for a formal letter of interpretation. I spoke with Mr. Rohm about his question.

Thanks,
Shelby

From: HDI Gary [mailto:gary@hdigauges.com]
Sent: Friday, September 11, 2015 11:44 AM
To: INFOCNTR (PHMSA)
Cc: Rohit Patel
Subject: RE: UN3090 vs. UN3091

Hi Info Center, please see attached documents as we pursue your interpretation of our power pack. The bulk batteries are shipped in this equipment connected via a diode and resistor and encapsulated with a potting epoxy. The power pack is a .8lb (.35kg) CSA-certified 3.6V battery pack comprised of 2 commercially available D batteries (see data sheet attached) each with 68.4 watt hour capacity. In another version, we use a DD battery (D model attached from the DD maker). Best Regards, Gary

From: HDI Gary
Sent: Friday, August 28, 2015 3:08 PM
To: 'infocntr@dot.gov'
Subject: UN3090 vs. UN3091

Hi Info Center at DOT, I need to make an official request to DOT to characterize our power pack as a device and not "bulk batteries" nor a "battery" and not 3090 but truly 3091. Thanks, Gary Rohm | Electrical Engineer | Office: 713-688-8555 ext. 227 | Fax: 713-688-2228 | Mobile: 832-512-5852 | gary@hdigauges.com | 4130 Directors Row Houston, TX 77092

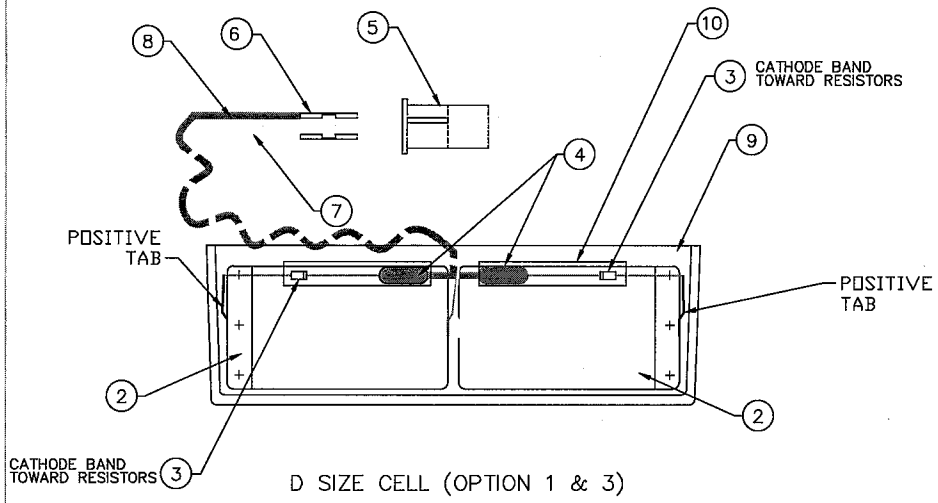

D SIZE CELL (OPTION 1 & 3)

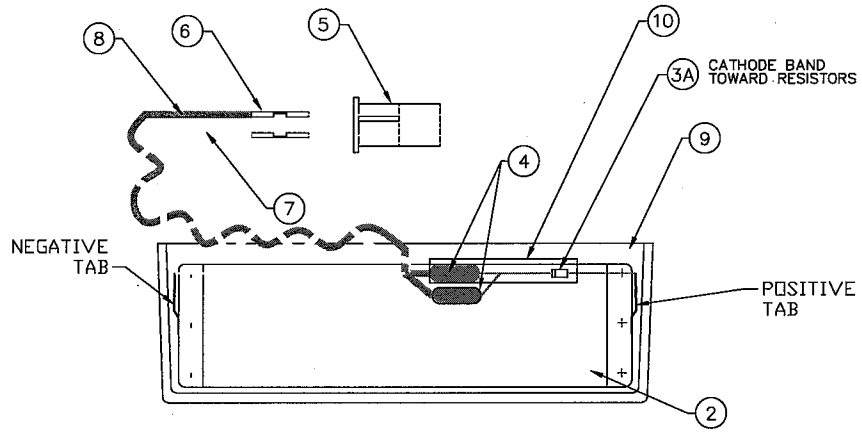

DD SIZE CELL (OPTION 2 & 4)

NOTES:

1. UPDATED FROM "E392" TO MATCH "E260" WITH THE EXCEPTION THAT BATTERY PACK WILL HAVE SHORTER ENDS AND OFFSET ON ONE SIDE TO FIT IN NEW 2000P REAR COVER.
2. ORIENT RESISTORS (ITEM 4), DIODE (ITEM 3), AND WIRE (ITEMS 7 & 8) AS SHOWN, AND SOLDER USING 60/40 TIN/LEAD SOLDER. SOLDER WIRE/RESISTOR/DIODE/BATTERY ASSEMBLY TOGETHER.
3. ENCAPSULATE ASSEMBLY USING POTTING EPOXY(ITEM 9) AND POTTING SHELL(ITEM 1).
4. ENGRAVE WITH DEVICE SERIAL # & OR HDI SALES ORDER NUMBER.
5. ATTACH TAG BEFORE INSTALLATION IN GAUGE.
6. SEE SHT 2 FOR COMPLETE BOM.
7. SEE SHT 3 FOR EPOXY THICKNESS INSIDE SHELL WITH D-CELL AND DD-CELL BATTERIES.

RELEASE	RELEASE DATE	RELEASE DESCRIPTION AND NOTES	DRAFTER	ENGINEER	APPROVER
G	2014-05-02	ADDED HEAT SHRINK SLEEVE PER ECO 1951	JMG	RSP	CSH
F	2014-03-25	REMOVED BATT THAT ARE NOT CSA APPRVD PER ECO 1935	JMG	RSP	CSH
E	2013-10-01	SHOWED D & DD CELL BATTERIES PER ECO 1886	RBH	RSP	CSH
D	2013-09-10	ADDED SHT 3 TO SHOW EPOXY THICKNESS IN SHELL PER ECO 1880	JMG	RSP	CSH
C	2013-02-14	CHANGED THE BATTERY SHELL	JMG	RSP	CSH
B	2003-5-14	ADDED PART NUMBERS TO BOM PER ECO 1138	RENEE		
A	2003-1-13	DRAWING RELEASED PER ECO 1094	RENEE		

PROPRIETARY NOTE
THIS DOCUMENT CONTAINS INFORMATION TO HDI INSTRUMENTS, LLC AND SHALL NOT BE REPRODUCED OR TRANSFERRED TO OTHER DOCUMENTS OR DISCLOSED TO OTHERS OR USED FOR ANY PURPOSE OTHER THAN THAT FOR WHICH IT WAS OBTAINED WITHOUT THE EXPRESSED WRITTEN CONSENT OF HDI INSTRUMENTS, LLC.

UNLESS OTHERWISE SPECIFIED
ALL DIMENSIONS ARE IN INCHES.
TOLERANCES ARE:
DECIMAL .XXX ±.005 .XX ± .05 .X ± .1
FRACTIONAL ±1/64
ANGULAR ±1/2°
REMOVE ALL BURRS & SHARP EDGES.
MATERIAL:
FINISH:

HDI
HDI Instruments, LLC 4130 Directors Row Houston TX 77092
Phone: 1.713.688.8555 Fax: 1.713.688.2229

HDI
SUB-ASSEMBLY MICRO P. POWER PACK

DATE	PROJECT NUMBER	SCALE	LOCATION	REV
12-12-2012	–	N/A	+A01	G

DRAWING NUMBER SAPBPAC-B004-ASY-AA
THIS SHEET: 1
NEXT SHEET: 2

UPDATED 03/25 0850

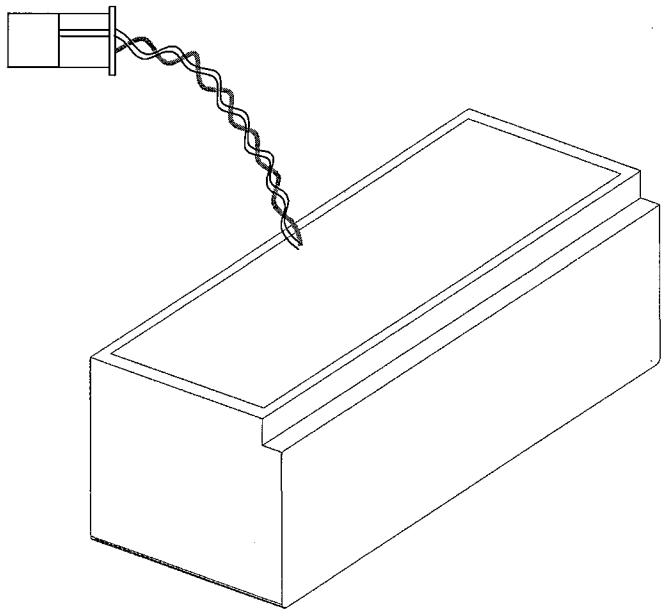

2000P GAUGE BATTERY

ITEM	QTY	HDI P/N	DESCRIPTION	COMMENTS	BOOK SEC#
1	1	M1238 OR 0G10	BLK EPXY SHELL		N/A
2	*		SEE BATTERY OPTIONS BELOW FOR BATTERY OR BATTERIES TO BE USED		N/A
3	2	ELEDIOD581700000	DIODE, SCHOTTKY	OPTION 1 & 3	10.32
3A	1	ELEDIOD581700000	DIODE, SCHOTTKY	OPTION 2 & 4	10.32
4	2	ELEREST006405001	RES 50 OHM 3.75W 5% WIREWOUND		10.30
5	1	CSMCONN0003PLG02	CONN PLUG 2CIR MATE N LOCK BTY		10.35
6	2	CSMCONN0121CNTFM	18-24 AWG TIN CRIMP BTRY LD		10.33
7	AR	*SEE WIRE COLOR CHART BELOW	WIRE 22 AWG, DOUBLE INSULATION SEE WIRE COLORS BY BATT CHART BELOW*		N/A
8	AR	*SEE WIRE COLOR CHART BELOW	WIRE 22 AWG, DOUBLE INSULATION SEE WIRE COLORS BY BATT CHART BELOW*		N/A
9	AR	CSMEPXY0965CMPAB	ELLSWORTH EPOXY, BLACK 600 M		10.34
10	AR	-	HEAT SHRINK SLEEVE .33MM THICK		-

*BATTERY OPTIONS

OPTION	QTY	HDI P/N	DESCRIPTION	COMMENTS	BOOK SEC#
1	2	PENDING	TADIRAN BATT D-CELL	OR EQUIVALENT	10.38
2	1	PENDING	OMNICELL BATT DOUBLE D-CELL	OR EQUIVALENT	10.37

*WIRE COLORS BY BATTERY

OPTION	ITEM	BATTERY	HDI P/N	WIRE COLOR	COMMENTS	BOOK SEC#
1	8	TADIRAN D-CELL +		RED	OR EQUIVALENT	10.31
	7	TADIRAN D-CELL -		WHITE	OR EQUIVALENT	10.31
2	8	OMNICELL DD-CELL +		RED	OR EQUIVALENT	10.31
	7	OMNICELL DD-CELL -		BLACK	OR EQUIVALENT	10.31

NOTES:

1. UPDATED FROM "E392" TO MATCH "E260" WITH THE EXCEPTION THAT BATTERY PACK WILL HAVE SHORTER ENDS AND OFFSET ON ONE SIDE TO FIT IN NEW 2000P REAR COVER.
2. ENGRAVE WITH DEVICE SERIAL # & OR HDI SALES ORDER NUMBER.
3. ATTACH TAG BEFORE INSTALLATION IN GAUGE.

RELEASE	RELEASE DATE	RELEASE DESCRIPTION AND NOTES	DRAFTER	ENGINEER	APPROVER
G	2014-05-02	ADDED HEAT SHRINK SLEEVE PER ECO 1951	JMG	RSP	CSH
F	2014-03-25	REMOVED BATT THAT ARE NOT CSA APPRVD PER ECO 1935	JMG	RSP	CSH
E	2013-10-01	ADDED ITEM 3A PER ECO 1886	RBH	RSP	CSH
D	2013-09-10	ADDED SHT 3 TO SHOW EPOXY THICKNESS IN SHELL PER ECO 1880	JMG	RSP	CSH
C	2013-02-14	CHANGED THE BATTERY SHELL	JMG	RSP	CSH
B	2003-5-14	ADDED PART NUMBERS TO BOM PER ECO 1138	RENEE		
A	2003-1-13	DRAWING RELEASED PER ECO 1094	RENEE		

PROPRIETARY NOTE

THIS DOCUMENT CONTAINS INFORMATION TO HDI INSTRUMENTS, LLC AND SHALL NOT BE REPRODUCED OR TRANSFERRED TO OTHER DOCUMENTS OR DISCLOSED TO OTHERS OR USED FOR ANY PURPOSE OTHER THAN THAT FOR WHICH IT WAS OBTAINED WITHOUT THE EXPRESSED WRITTEN CONSENT OF HDI INSTRUMENTS, LLC.

UNLESS OTHERWISE SPECIFIED

ALL DIMENSIONS ARE IN INCHES.
TOLERANCES ARE:

DECIMAL	FRACTIONAL	ANGULAR
.XXX ±.005	±1/64	±1/2°
.XX ± .05		
.X ± .1		

REMOVE ALL BURRS & SHARP EDGES.

MATERIAL: FINISH:

HDI

HDI Instruments, LLC 4130 Directors Row Houston TX 77092
Phone 1.713.688.8555 Fax 1.713.688.2229

HDI
SUB-ASSEMBLY MICRO P. POWER PACK

DATE	PROJECT NUMBER	SCALE	LOCATION	REV
12-12-2012	-	N/A	+A01	G

DRAWING NUMBER SAPBPAC-B004-ASY-AA THIS SHEET: 2 NEXT SHEET: 3

UPDATED 03/25 0250

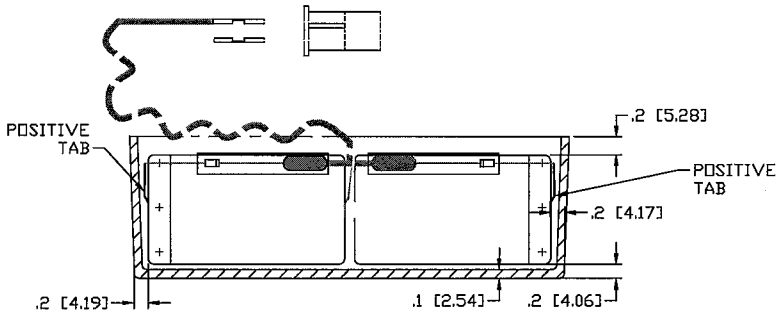

ELEVATION SECTION VIEW OF D-CELL EPOXY COVERAGE

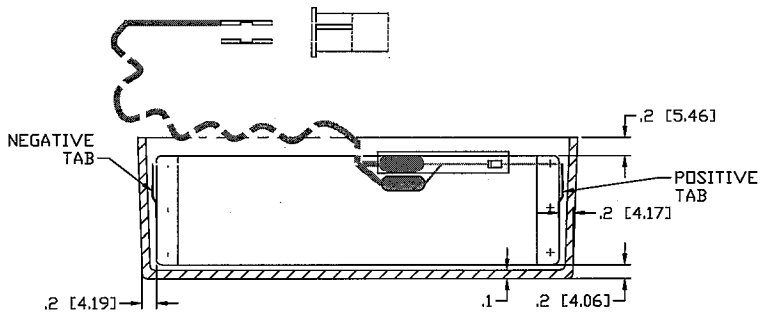

ELEVATION SECTION VIEW OF DD-CELL EPOXY COVERAGE

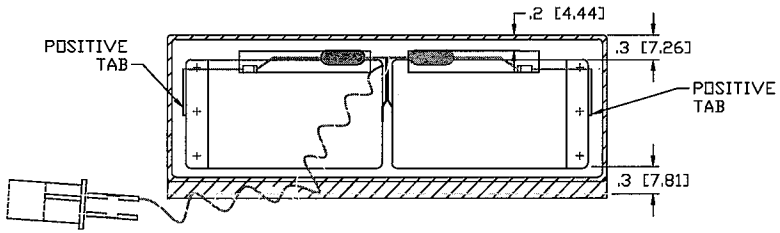

TOP VIEW OF D-CELL EPOXY COVERAGE

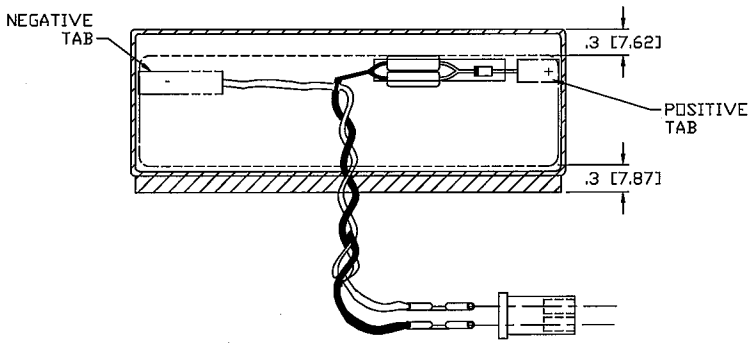

TOP VIEW OF DD-CELL EPOXY COVERAGE

NOTES:
1. DIMENSIONS ARE IN INCHES [MILLIMETERS].
2. SIZE OF BOTH TADIRAN AND OMNICELL BATTERIES ARE THE SAME.
3. SEE SHT 2 FOR COMPLETE BOM.

RELEASE	RELEASE DATE	RELEASE DESCRIPTION AND NOTES	DRAFTER	ENGINEER	APPROVER
G	2014-05-02	ADDED HEAT SHRINK SLEEVE PER ECO 1951	JMG	RSP	CSH
F	2014-03-25	REMOVED BATT THAT ARE NOT CSA APPRVD PER ECO 1935	JMG	RSP	CSH
E	2013-10-01	ADDED UPDATED PER ECO 1886	RBH	RSP	CSH
D	2013-09-10	ADDED SHT 3 TO SHOW EPOXY THICKNESS IN SHELL PER ECO 1880	JMG	RSP	CSH
C	2013-02-14	CHANGED THE BATTERY SHELL	JMG	RSP	CSH
B	2003-5-14	ADDED PART NUMBERS TO BOM PER ECO 1138	RENEE		
A	2003-1-13	DRAWING RELEASED PER ECO 1094	RENEE		

PROPRIETARY NOTE
THIS DOCUMENT CONTAINS INFORMATION TO HDI INSTRUMENTS, LLC AND SHALL NOT BE REPRODUCED OR TRANSFERRED TO OTHER DOCUMENTS OR DISCLOSED TO OTHERS OR USED FOR ANY PURPOSE OTHER THAN THAT FOR WHICH IT WAS OBTAINED WITHOUT THE EXPRESSED WRITTEN CONSENT OF HDI INSTRUMENTS, LLC.

UNLESS OTHERWISE SPECIFIED
ALL DIMENSIONS ARE IN INCHES.
TOLERANCES ARE:
DECIMAL: .XXX ±.005, .XX ± .03, .X ± .1
FRACTIONAL: ±1/64
ANGULAR: ±1/2°
REMOVE ALL BURRS & SHARP EDGES.
MATERIAL: FINISH:

HDI
HDI Instruments, LLC 4130 Directors Row Houston TX 77092
Phone: 1.713.688.8555 Fax: 1.713.688.8859

HDI
SUB-ASSEMBLY MICRO P. POWER PACK
EPOXY COVERAGE OF D-CELLS AND DD-CELLS

DATE	PROJECT NUMBER	SCALE	LOCATION	REV
12-12-2012	–	N/A	+A01	G
DRAWING NUMBER SAPBPAC-B004-ASY-AA			THIS SHEET: 3	
			NEXT SHEET: END	

UPDATED 03/25 0857

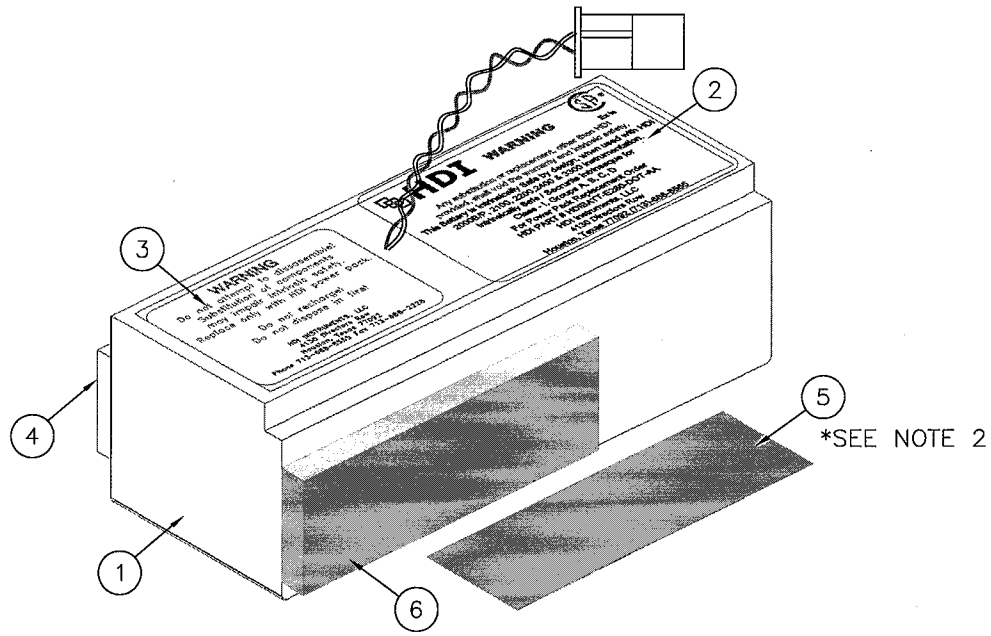

HDI 2000P BATTERY					
ITEM	QTY	HDI P/N	DESCRIPTION	COMMENTS	MFG P/N
1	1	SAPBPAC-B004-ASY-AA	SUB-ASSEMBLY, MICRO P. POWER PACK	USE RevC	7.2
2	1	A362	MICRO P. POWER PACK BATTERY TAG, MYLAR	USE RevC	2.3
3	1	ART2100-A048-TAG-AA	WARNING LABEL		2.3
4	1	MECTOOL-0105-DES-NT	DESSICANT	REPLACE W/EVERY BATT CHANGE	10.26
5	1	MECTOOL-0106-HUM-IN	HUMIDITY INDICATION	REPLACE W/EVERY BATT CHANGE	10.27
6	1	MECTOOL-0102-CRR-IN	CORROSION INHIBITOR	REPLACE W/EVERY BATT CHANGE	10.29

NOTES:
1. ATTACH TAG BEFORE INSTALLATION IN GAUGE.
2. PLACE INDICATOR INSIDE BACK COVER WHERE BEST FITS.

RELEASE	RELEASE DATE	RELEASE DESCRIPTION AND NOTES	DRAWN BY	ENGINEER	APPROVED
G	02-14-13	CHANGED THE BATTERY SHELL	JMG	RSP	CSH
F	01-22-10	ADDED CONNECTOR END VIEW PER ECO 1497			
E	02-17-04	REVISED PER ECO 1213			
D	02-10-03	ADDED TIE WRAPS PER ECO 1102			
C	01-07-03	DRAWING STANDARIZED PER ECO 1094			
B	04-23-01	CHANGED DIODE AND EPOXY			
A	N/A	DRAWING RELEASED			

PROPRIETARY NOTE
THIS DOCUMENT CONTAINS INFORMATION TO HDI INSTRUMENTS, LLC AND SHALL NOT BE REPRODUCED OR TRANSFERRED TO OTHER DOCUMENTS OR DISCLOSED TO OTHERS OR USED FOR ANY PURPOSE OTHER THAN THAT FOR WHICH IT WAS OBTAINED WITHOUT THE EXPRESSED WRITTEN CONSENT OF HDI INSTRUMENTS, LLC.

UNLESS OTHERWISE SPECIFIED
ALL DIMENSIONS ARE IN INCHES.
TOLERANCES ARE:
DECIMAL .XXX ±.005 .XX ± .05 .X ± .1
FRACTIONAL ±1/64
ANGULAR ±1/2°
REMOVE ALL BURRS & SHARP EDGES.
MATERIAL: FINISH:

HDI
HDI Instruments, LLC 4130 Directors Row Houston TX 77092
Phone: 1.713.688.8555 Fax: 1.713.688.2228

HDI
ASSEMBLY MICRO P. POWER PACK

DATE	PROJECT NUMBER	SCALE	LOCATION	REV
02-14-2013	–	N/A	+A01	G

DRAWING NUMBER: HDIBATT-E260-DOT-AA
THIS SHEET 1
NEXT SHEET END

UPDATED 5/06 1530

MODEL TL-5930/F

For Utility Metering Applications

TADIRAN LITHIUM BATTERIES

TECHNICAL DATA

(Typical values @+25°C for batteries stored for one year or less)

Nominal capacity @ 4 mA, to 2 V	19 Ah
Rated voltage	3.6 V
Maximum recommended continuous current	230 mA
Maximum pulse current capability	500 mA
Weight	105 g (3.7 oz)
Operating temperature range	-55 °C to +85 °C
Li metal content	approx. 5 g
U.L. Component Recognition, MH 12193	

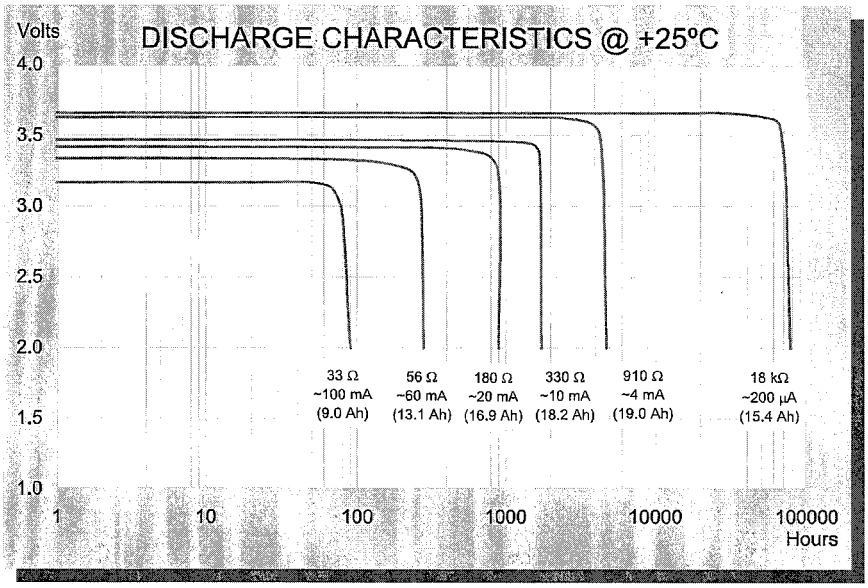

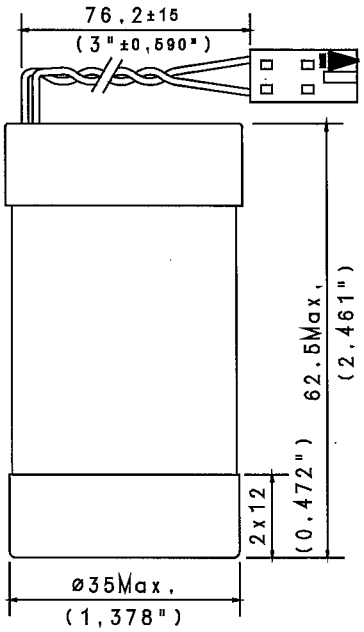

ADDITIONAL INFORMATION

CONNECTOR TYPE:	
HOUSING	MOLEX 50-57-9402
CONTACTS	MOLEX 16-02-0086
CATALOUGE NO.	15-5930-40000

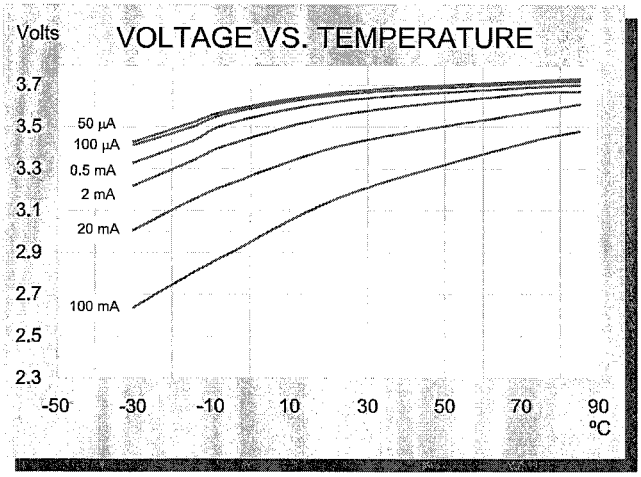

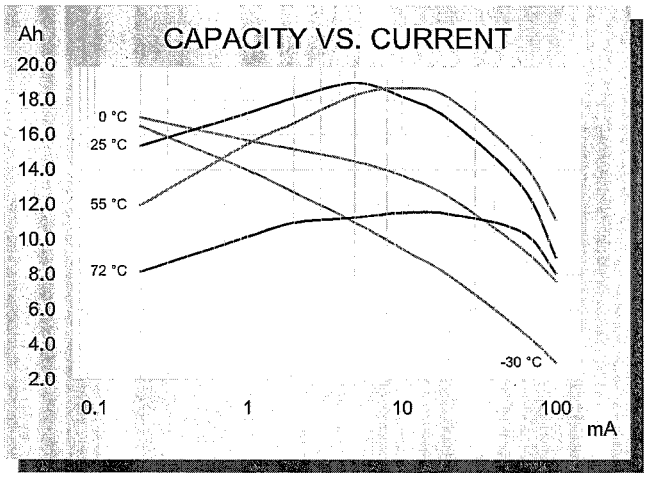

iXtra - Long Term High Performance

Note: Any presentations in this data sheet concerning performance are for information purpose only and are not construed as warranties either expressed or implied, of future performance.

Rev. D 01/06

TECHNICAL SPECIFICATION ER34615

Omnicel

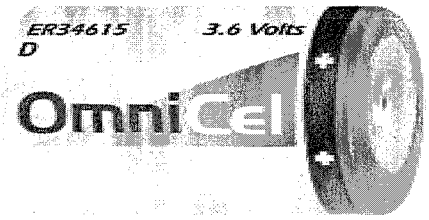

MODEL ER34615
Lithium Thionyl Chloride
(Li-SOCl2) Battery
(International size reference: D, ER34615)

ELECTRICAL CHARACTERISTICS

(typical values for cells stored for one year or less, at 25°C)

- **Nominal capacity** **19Ah**
  (at 5.0 mA, +25°C, 2.0V cut off. The capacity restored by the cell varies according to current drain, temperature and cut off voltage.)

- **Rated voltage** **3.6 V**

- **Maximum recommended continuous current** **230 mA**
  (to get 50% of the nominal capacity at +25°C with 2.0V cut off. Higher currents possible. Consult Omnicel.)

- **Pulse capability:** varies according to pulse characteristics (frequency and duration), temperature, cell history (storage conditions prior to usage) and the application's acceptable minimum voltage.

- **Maximum pulse current capability** **400 mA**
  Rated 1 sec. pulse capability (to 3V) **100 mA**

- **Storage** (recommended) **30°C max**
  (possible without leakage) **-55° / +120°C**

- **Operating temperature range** **-55° / +85°C**
  (Operation at temperature different from ambient may lead to reduced capacity and lower voltage plateau readings.)

KEY FEATURES

- ✔ High and stable operating voltage
- ✔ High minimum voltage during pulsing
- ✔ Low self discharge rate (less than 1% after 1 year of storage at +25°C)
- ✔ Stainless steel container
- ✔ Hermetic glass-to-metal sealing
- ✔ Non-flammable electrolyte
- ✔ Compliant with IEC 86-4 safety standard and EN 50020 intrinsic safety
- UL Underwriters Laboratories (UL) Component Recognition (File Number MH 47566)

MAIN APPLICATIONS

- ✔ Utility metering
- ✔ Alarms and security devices
- ✔ Memory back-up
- ✔ Tracking systems
- ✔ Automotive electronics
- ✔ Professional electronics
  ...etc.

WARNING:
Fire, explosion and severe burn hazard. Do not recharge, crush, disassemble, heat above 212°F (100°C), incinerate, or expose contents to water.

Note: Any representations in this data sheet concerning performance are for informational purpose only and are not construed as warranties, either expressed or implied, of future performance.

DISCHARGE CHARACTERISTICS @ +25°C

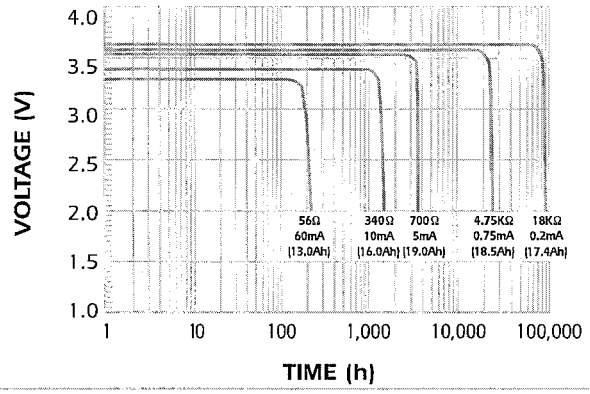

ER34615

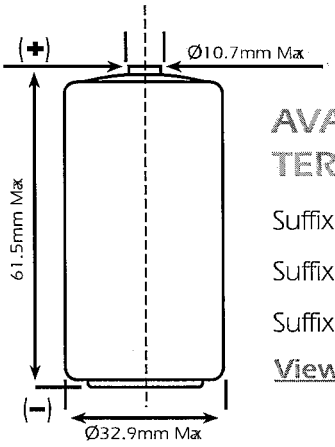

AVAILABLE TERMINATIONS

Suffix–/S	Standard
Suffix–/T	Solder Tabs
Suffix–/W	Wire Leads

View available terminations

VOLTAGE VS. TEMPERATURE

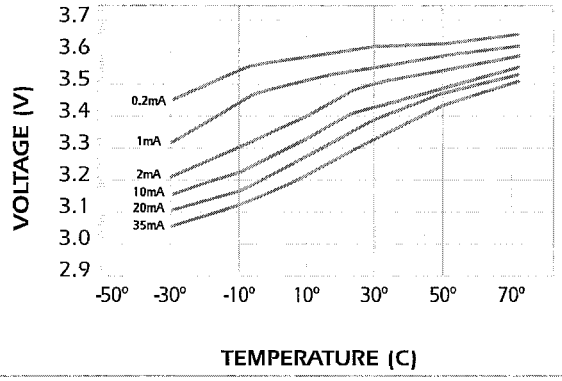

PHYSICAL CHARACTERISTICS

Diameter (max)	32.9 mm (1.295")
Height (max)	61.5 mm (2.421")
Typical weight	100 g (3.527oz)

CAPACITY VS. CURRENT

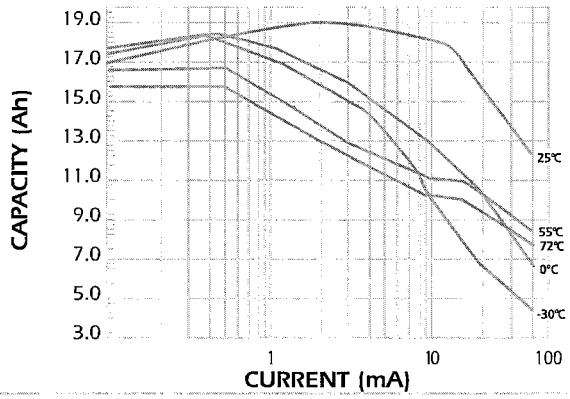

STORAGE CHARACTERISTICS

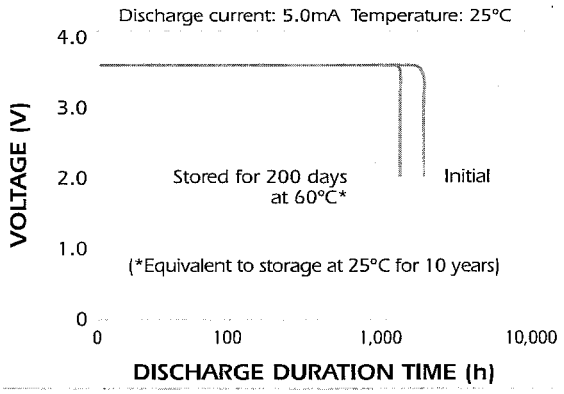

www.omnicel.com
800.332.2436

Omni