U.S. Department
of Transportation

Research &
Special Programs
Administration

400 Seventh Street S.W.
Washington, D.C. 20590

U.S. Environmental
Protection Agency

Office Solid Waste &
Emergency Response

401 M Street, SW, 5201G
Washington, DC 20460

FEB - 4 2000

From: Richard B. Felder, Associate Administrator, Office of Pipeline Safety, United States Department of Transportation

Stephen D. Luftig, Director, Office of Emergency and Remedial Response, United States Environmental Protection Agency

To: Department of Transportation, Office of Pipeline Safety Regional Directors

Director, Office of Site Remediation and Restoration EPA Region I
Director, Emergency and Remedial Response Division EPA Region II
Directors, Hazardous Waste Management Division EPA Regions III and IX
Director, Waste Management Division EPA Regions IV, VIII
Directors, Superfund Division EPA Regions V, VI, VII
Director, Environmental Cleanup Office EPA Region X

Subject: Jurisdiction over Breakout Tanks/Bulk Oil Storage Tanks (Containers) at Transportation-Related and Non-Transportation-Related Facilities

I. Purpose

The purpose of this agreement is to clarify jurisdictional issues and establish mutual goals for the Office of Emergency and Remedial Response, Environmental Protection Agency (EPA) and the Office of Pipeline Safety, Department of Transportation (DOT). This letter does not amend the 1971 MOU between the EPA and DOT or redelegate any responsibilities agreed to under that MOU or previously assigned to DOT or EPA under Executive Order 12777 or any previous Executive Order.

II. Authority and History

Section 311 of the Clean Water Act (CWA) (33 U.S.C. 1321) gives the President authority to issue regulations regarding prevention, preparedness, and response planning for facilities. Executive Order 12777, signed on October 18, 1991, delegates responsibilities under CWA Section 311 to EPA to issue regulations regarding prevention, preparedness, and response planning for non-transportation-related onshore facilities. EPA was also delegated responsibility

to establish procedures, methods, and equipment and other requirements to prevent and contain discharges of oil and hazardous substances from non-transportation-related onshore facilities. Those regulations are found at 40 CFR 112. DOT was delegated authority to issue regulations regarding prevention, preparedness, and response planning at transportation-related onshore facilities. DOT was also delegated responsibility to establish procedures, methods, and equipment and other requirements to prevent and contain discharges of oil and hazardous substances from transportation-related onshore facilities. DOT issued response planning regulations for transportation-related onshore oil pipelines, found at 49 CFR 194.

DOT also issued safety standards found at 49 CFR 195 for pipeline facilities under the Pipeline Safety Act of 1992 (49 U.S.C. 60101). DOT considers environmental factors when issuing pipeline safety standards.

III. Current Status at Complex Facilities

A 1971 Memorandum of Understanding (MOU) between the EPA and DOT defines transportation and non-transportation-related activities. A facility with both transportation-related and non-transportation-related activities is a "complex facility" and is subject to the dual jurisdiction of EPA and DOT. Both EPA and DOT have determined that the definition of a complex facility, as currently interpreted under both agencies programs, can include an entire facility or a single tank. Owners or operators of a complex facility must comply with all the regulatory requirements of both agencies when both agencies have jurisdiction. An example of dual jurisdiction is a bulk storage container serving as a tank storing oil while also serving as a breakout tank for a pipeline or other transportation purposes. Attachments 1-10 provide practical examples of complex facilities showing jurisdictional delineation to minimize potential confusion over regulatory responsibility.

IV. Next Steps

To improve communications, both DOT and EPA have initiated talks at the Headquarters level. These talks will be expanded to include regional representatives. Better communications entails; (1) improving information sharing on pipeline and tank incidents resulting in discharges to navigable water, material failures, human errors and other activities resulting in a discharge; (2) improving information sharing relating to pollution prevention, preparedness, and response; (3) sharing critiques of response efforts by EPA On-Scene Coordinators (OSCs) with DOT to enhance response planning of the pipeline operator (DOT may also consider these critiques in revisions to its regulations); (4) including an EPA participant on the Technical Hazardous Liquid Pipeline Safety Standards Committee (THLPSSC); (5) including a DOT Office of Pipeline Safety Regional member on each Inland Area Committee who may advise the EPA OSC on issues related to pipelines and breakout tanks; (6) continuing the DOT practice of offering EPA OSCs the opportunity to review submitted response plans before DOT approval; and (7) continuing discussions to resolve the jurisdictional issues surrounding oil gathering lines and their associated tanks.

Cross training is also important. EPA will make space available for DOT representatives to attend Spill Prevention, Control, and Countermeasure and Facility Response Planning training courses. DOT will make space available for EPA representatives and OSCs to attend courses in pipeline safety and inspection. DOT and EPA personnel will establish the appropriate level of participation in these training opportunities over the next three years. The agencies will also explore other opportunities for cross training including the Freshwater Spill Symposium, Preparedness for Response Exercise Program (PREP), etc.

DOT and EPA will establish procedures for the joint inspection of facilities subject to dual jurisdiction. A joint inspection will be considered the equivalent of a separate inspection by each agency. DOT and EPA will identify risk factors to consider when identifying high-priority/high-risk facilities subject to joint inspections. These risk factors include, but are not limited to; proximity to densely populated areas, proximity to navigable waters or environmentally sensitive areas as defined in Area Contingency Plans or other appropriate documents, areas likely to be subject to natural disasters, facility spill history, and compliance history. DOT and EPA regional representatives will use the procedures to identify those facilities that will be jointly inspected by both agencies. Facilities should be offered the opportunity to elect to participate in joint inspections. A joint inspection does not abridge the ability of each agency to implement enforcement activities arising from those inspections, nor limit the right to conduct separate inspections of any facility subject to dual jurisdiction. DOT and EPA will endeavor to conduct six to ten joint inspections nationwide within one year of this memorandum. The agencies will assess the effectiveness of the joint inspection program at the completion of all of the joint inspections.

V. Immediate Considerations and Long Term Goals

While DOT and EPA have different historical emphases, our respective goals are complementary. The mutual long term goals of EPA and DOT are:

1. To ensure that all breakout tanks/bulk storage containers are appropriately regulated under all applicable statutes,
2. That the rules and enforcement practices of both agencies are substantially equivalent to the extent possible and,
3. That as many facilities as possible are subject to single jurisdiction in the interest of regulatory efficiency.

DOT and EPA want to encourage the use of tank management programs which exemplify best engineering and operational practices in the industry. Our efforts to recognize excellence in performance will enable both agencies to funnel lessons back into our tank programs to ensure that they are dynamic and able to keep pace with developments in the filed. Both agencies share the goal of improving the effectiveness of our tank inspection programs while focusing our limited resources on those facilities that pose the greatest risk to the environment

Over a five-year period, DOT and EPA shall undertake joint efforts to measure the effectiveness of DOT and EPA regulatory programs in protecting the environment and contributing to the safety of the regulated industry. The agencies will determine and agree upon factors including, but not limited to regulations, implementation, enforcement, and additional exemplary protective measures. DOT and EPA may invite the Coast Guard to participate in or review these efforts.

EPA and DOT are committed to working diligently towards achieving these goals. Until these long term goals are achieved, EPA and DOT shall respect the jurisdiction of its sister agency and encourage regulated facilities to fully comply with each agency's regulations.

For more information contact David Lopez, Director, Office of Emergency and Remedial Response Oil Program Center at (703) 603-8707 and Stacey Gerard, Director, Office of Policy, Regulations, and Training (202) 366-4595.

Attachments

cc: Timothy Fields Jr, Assistant Administrator, OSWER
Mike Shapiro, Deputy Assistant Administrator, OSWER
Jim Makris, Director, CEPPO, OSWER
Steve Herman, Assistant Administrator, OECA
Eric Schaeffer, Director, Office of Regulatory Enforcement, OECA
Earl Salo, Assistant General Counsel for Superfund, OGC
Bob Cianciarulo, Superfund/Oil Program Lead Region Coordinator
EPA Regional Removal Managers
Elaine Joost, Acting Chief Counsel, RSPA
Commandant, U.S. Coast Guard (G-MS, G-MO, G-MSO, G-MOC, G-MOR)

BREAKOUT TANKAGE

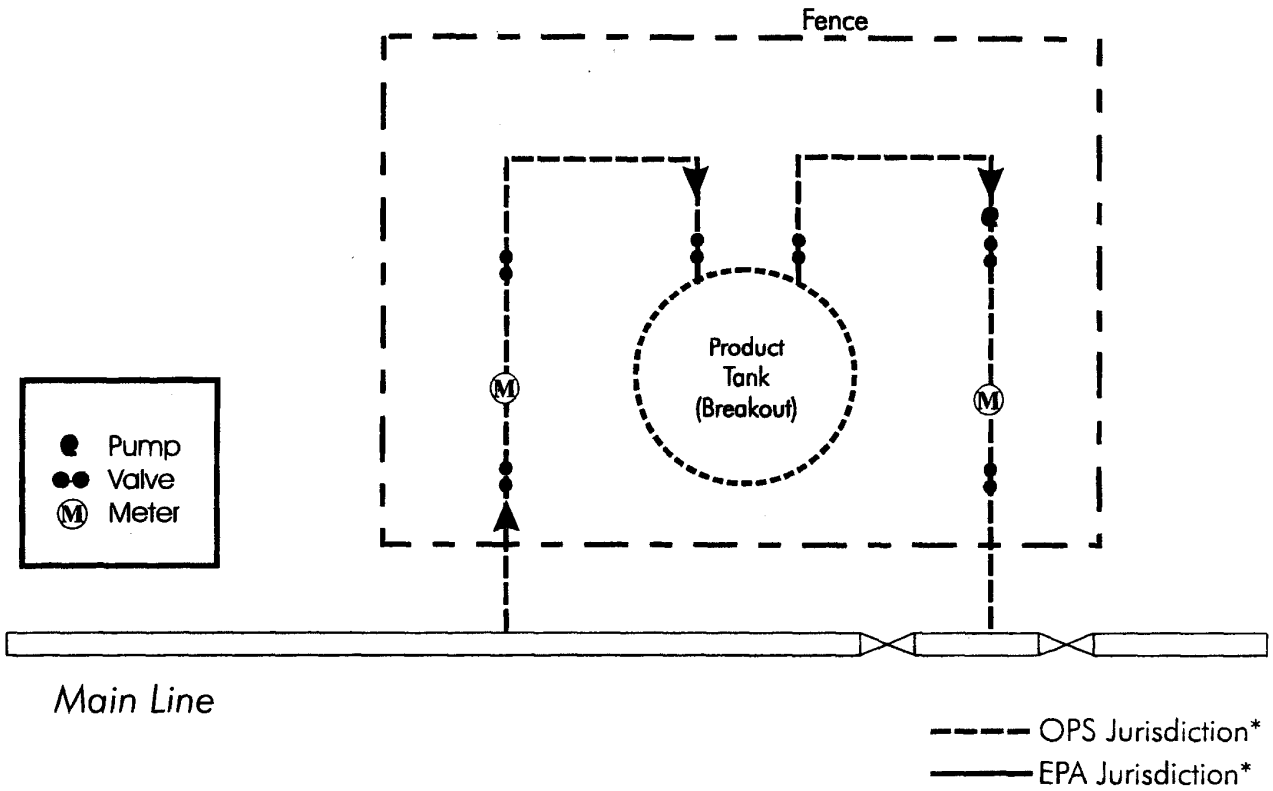

SOURCE: US EPA REV: 11/03/99

ATTACHMENT 1

STORAGE TANKAGE

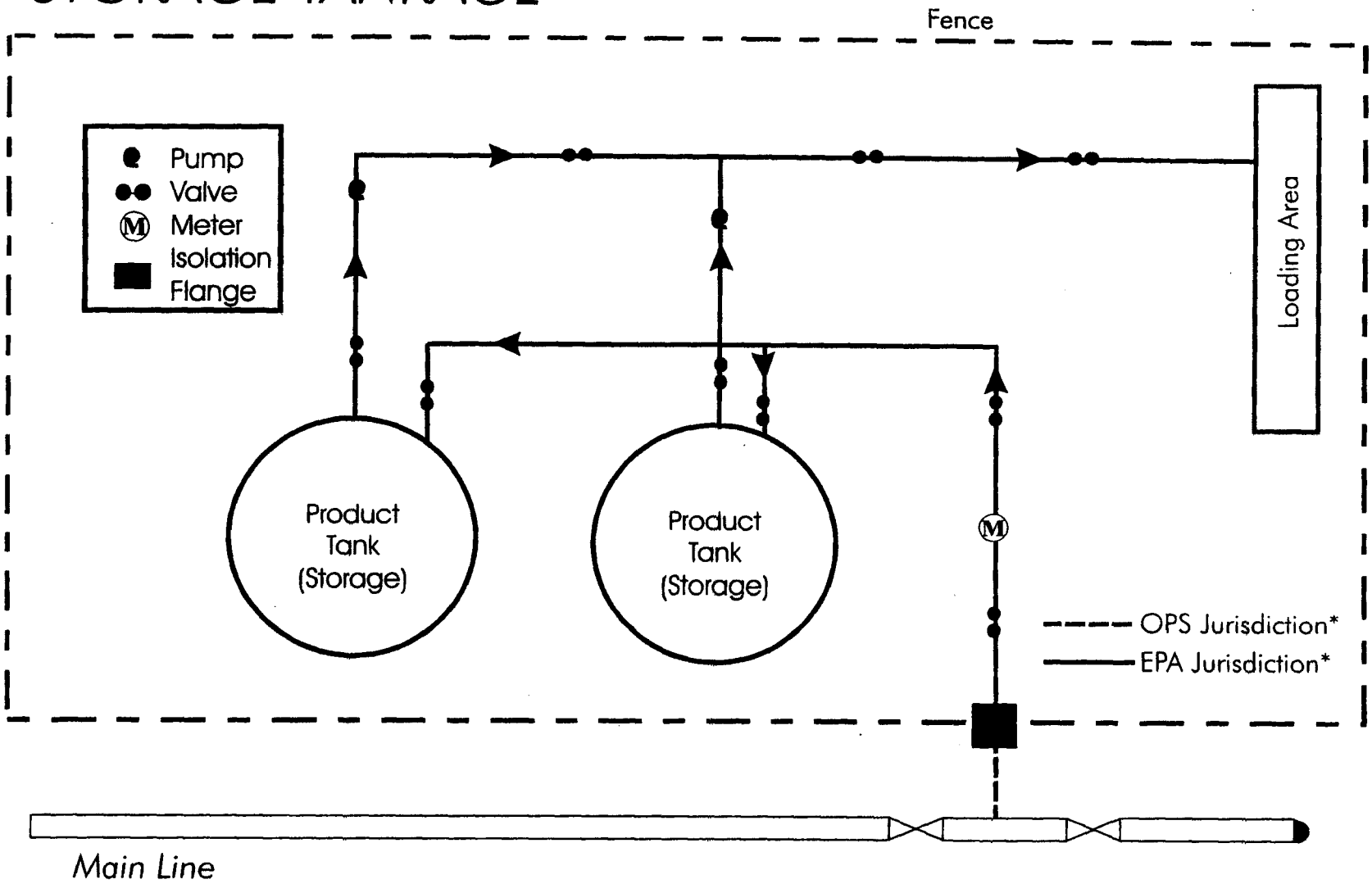

* This diagram does not identify the precise location where the change in jurisdiction occurs between EPA and OPS for the purpose of the Clean Water Act, Section 311(j) (33 USC 1321(j)). When the pipeline operator and the storage or breakout tank operator remain the same, the change in jurisdiction occurs at the first meter, valve, or isolation flange at or inside the facility property. When the pipeline operator and the storage or breakout tank operator are not the same, the change in jurisdiction occurs at the change in operational responsibility or at the first meter, valve, or isolation flange at or inside the facility property. In either of the above situations, the location of the property line should not solely be used to determine jurisdiction when operational activities (loading/offloading) extend beyond the property line.

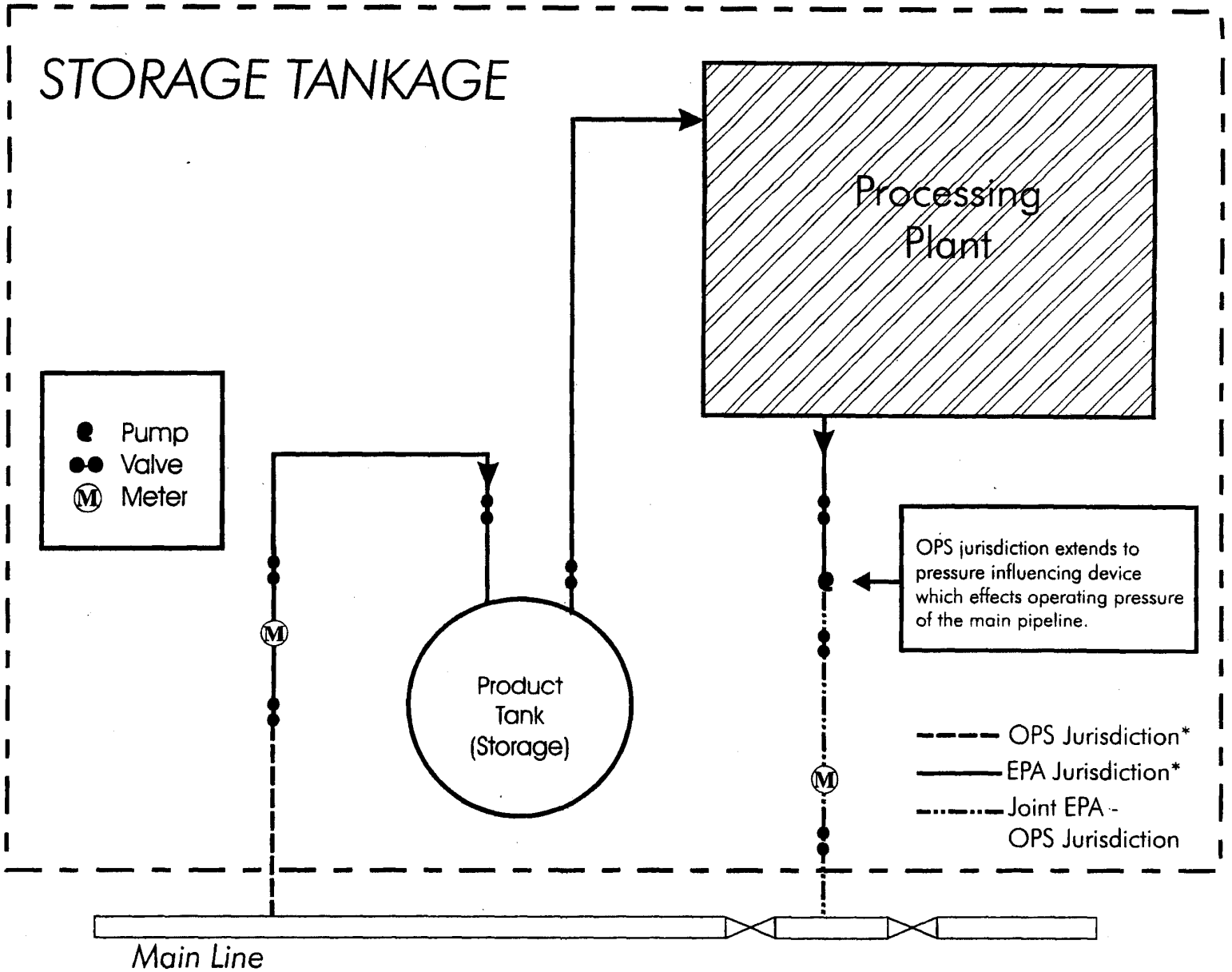

* This diagram does not identify the precise location where the change in jurisdiction occurs between EPA and OPS for the purpose of the Clean Water Act, Section 311(j) (33 USC 1321(j)). When the pipeline operator and the storage or breakout tank operator remain the same, the change in jurisdiction occurs at the first and last pressure influencing device, meter, valve, or isolation flange, at or inside the facility property. When the pipeline operator and the storage or breakout tank operator are not the same, the change in jurisdiction occurs at the change in operational responsibility or at the first and last pressure influencing device, valve, or isolation flange, at or inside the facility property. In either of the above situations, the location of the property line should not solely be used to determine jurisdiction when operational activities (loading/offloading) extend beyond the property line.

SOURCE: US EPA REV: 11/03/99

ATTACHMENT 3

BREAKOUT AND STORAGE TANKAGE - JOINT EPA - OPS JURISDICTION

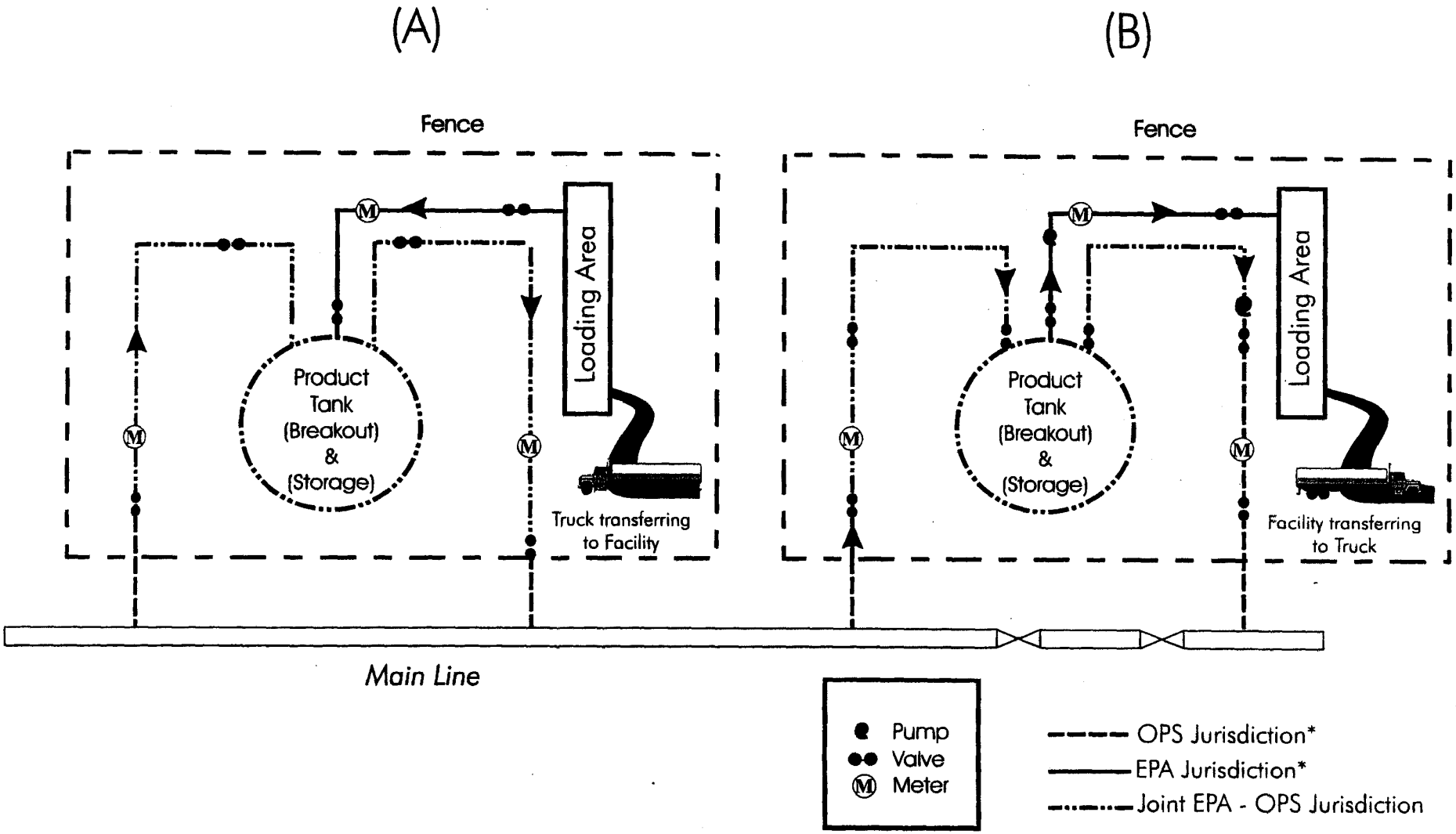

* This diagram does not identify the precise location where the change in jurisdiction occurs between EPA and OPS for the purpose of the Clean Water Act, Section 311(j) (33 USC 1321(j)). When the pipeline operator and the storage or breakout tank operator remain the same, the change in jurisdiction occurs at the first and last pressure influencing device, meter, valve, or isolation flange, at or inside the facility property. When the pipeline operator and the storage or breakout tank operator are not the same, the change in jurisdiction occurs at the change in operational responsibility or at the first and last pressure influencing device, valve, or isolation flange, at or inside the facility property. In either of the above situations, the location of the property line should not solely be used to determine jurisdiction when operational activities (loading/offloading) extend beyond the property line.

SOURCE: US EPA REV: 11/04/99

ATTACHMENT 4

STORAGE AND BREAKOUT TANKAGE - JOINT EPA - OPS JURISDICTION

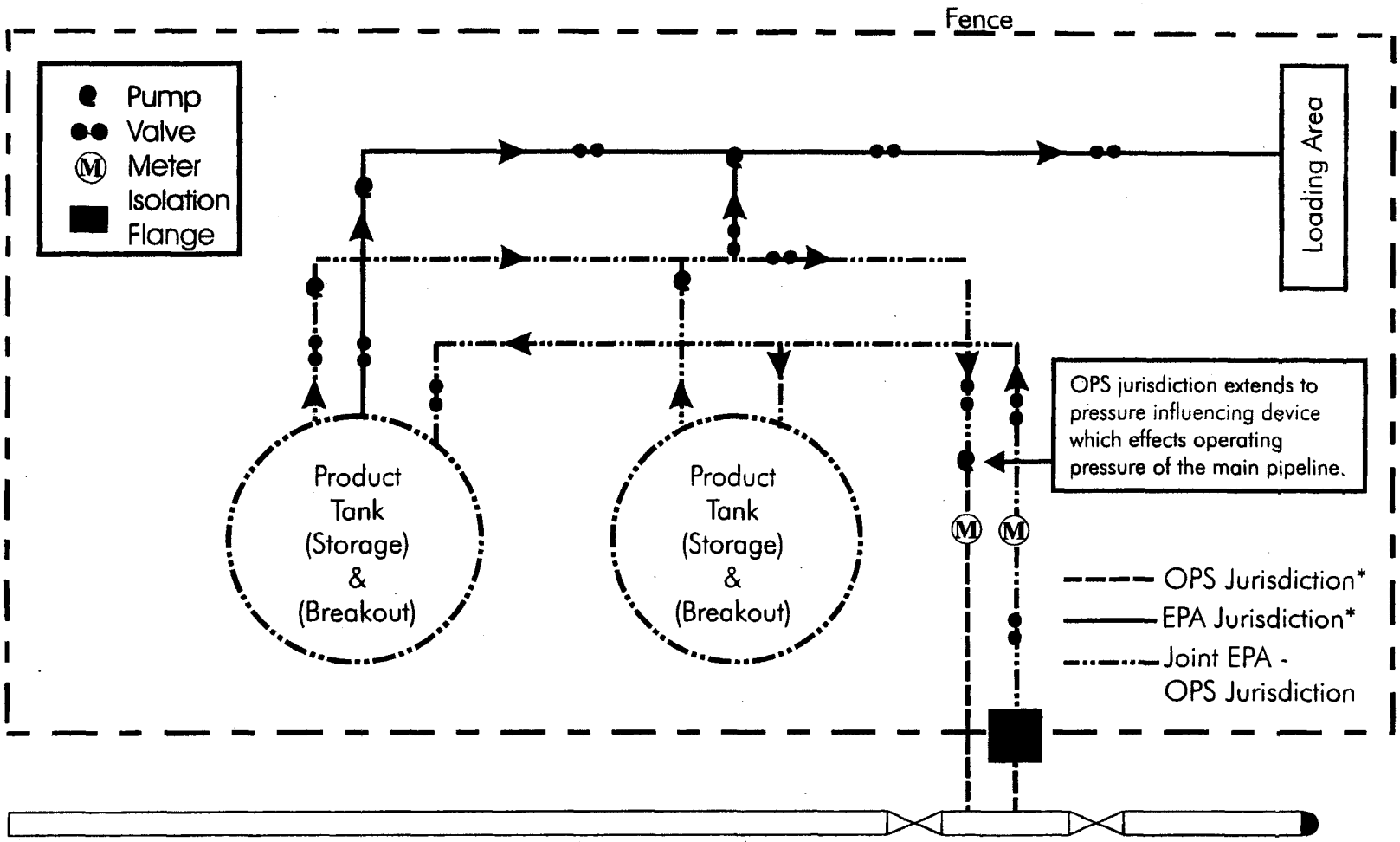

Main Line

* This diagram does not identify the precise location where the change in jurisdiction occurs between EPA and OPS for the purpose of the Clean Water Act, Section 311(j) (33 USC 1321(j)). When the pipeline operator and the storage or breakout tank operator remain the same, the change in jurisdiction occurs at the first and last pressure influencing device, meter, valve, or isolation flange, at or inside the facility property. When the pipeline operator and the storage or breakout tank operator are not the same, the change in jurisdiction occurs at the change in operational responsibility or at the first and last pressure influencing device, valve, or isolation flange, at or inside the facility property. In either of the above situations, the location of the property line should not solely be used to determine jurisdiction when operational activities (loading/offloading) extend beyond the property line.

SOURCE: US EPA REV: 11/03/99

ATTACHMENT 5

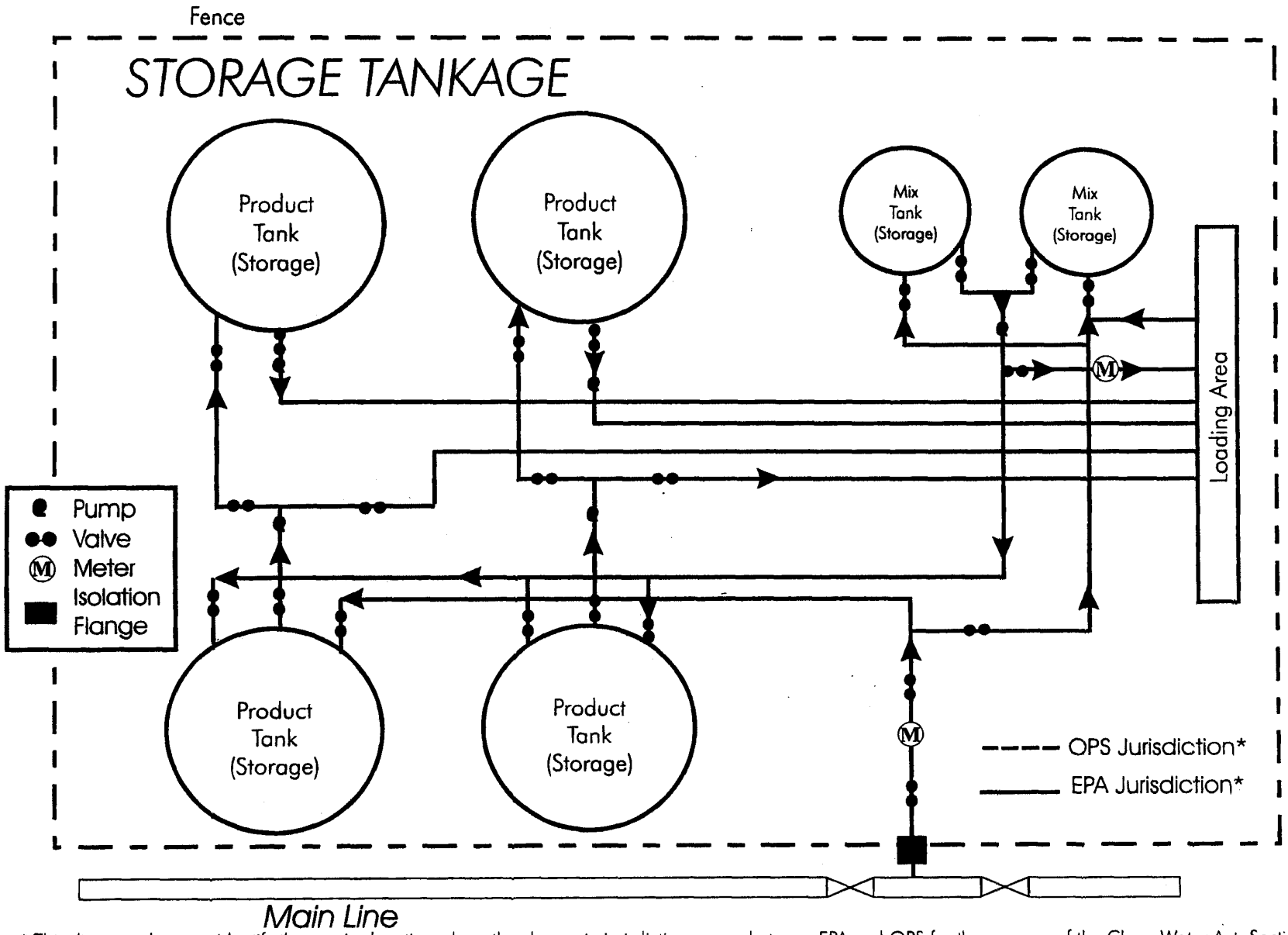

* This diagram does not identify the precise location where the change in jurisdiction occurs between EPA and OPS for the purpose of the Clean Water Act, Section 311(j) (33 USC 1321(j)). When the pipeline operator and the storage or breakout tank operator remain the same, the change in jurisdiction occurs at the first meter, valve, or isolation flange at or inside the facility property. When the pipeline operator and the storage or breakout tank operator are not the same, the change in jurisdiction occurs at the change in operational responsibility or at the first meter, valve, or isolation flange at or inside the facility property. In either of the above situations, the location of the property line should not solely be used to determine jurisdiction when operational activities (loading/offloading) extend beyond the property line.

SOURCE: US EPA REV: 11/03/99

ATTACHMENT 6

STORAGE & BREAKOUT TANKAGE - JOINT EPA - OPS JURISDICTION

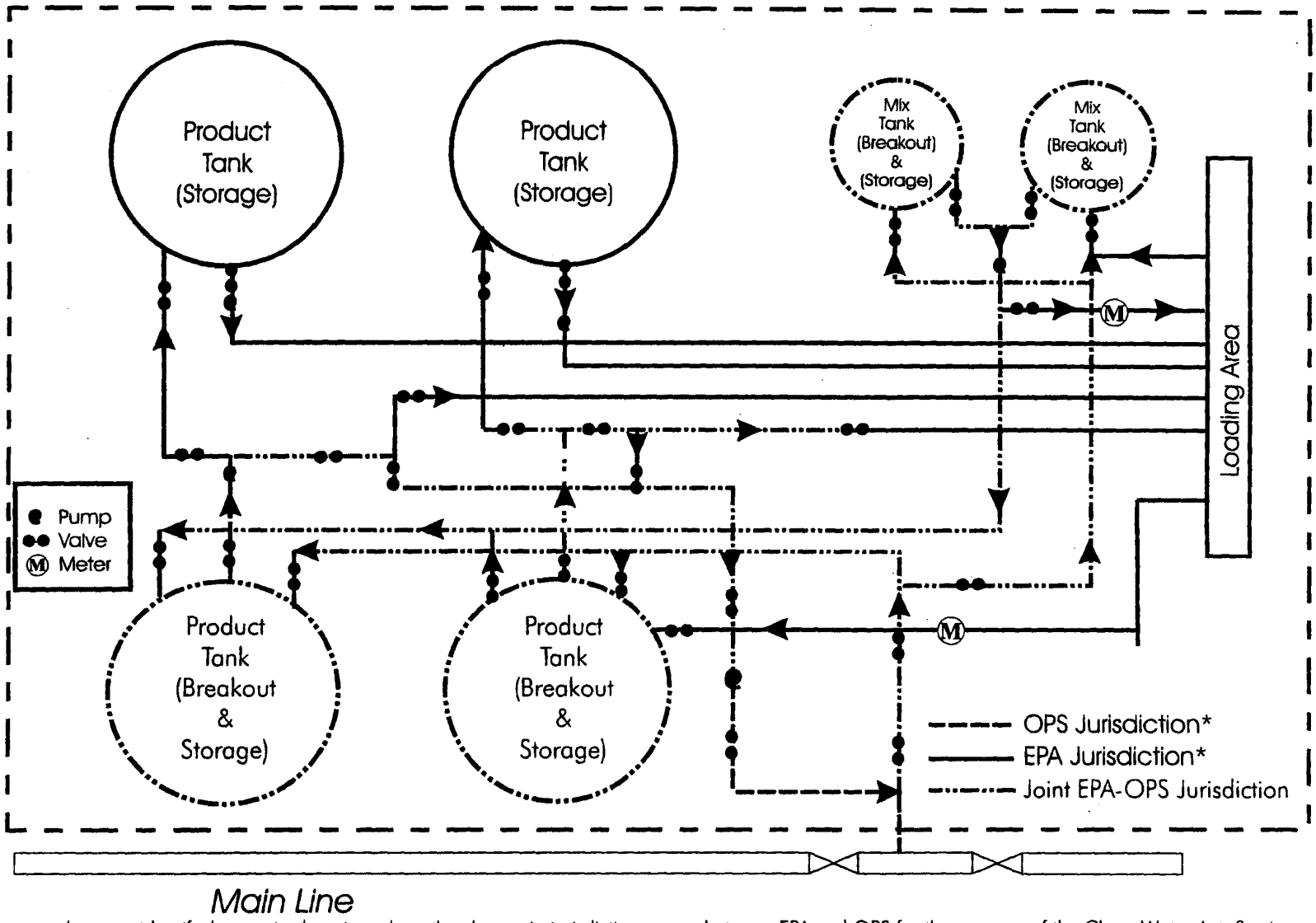

* This diagram does not identify the precise location where the change in jurisdiction occurs between EPA and OPS for the purpose of the Clean Water Act, Section 311(j) (33 USC 1321(j)). When the pipeline operator and the storage or breakout tank operator remain the same, the change in jurisdiction occurs at the first meter, valve, or isolation flange at or inside the facility property. When the pipeline operator and the storage or breakout tank operator are not the same, the change in jurisdiction occurs at the change in operational responsibility or at the first meter, valve, or isolation flange at or inside the facility property. In either of the above situations, the location of the property line should not solely be used to determine jurisdiction when operational activities (loading/offloading) extend beyond the property line.

ATTACHMENT 7

SOURCE: US EPA REV: 11/04/99

STORAGE TANKAGE ASSOCIATED WITH PRODUCTION/GATHERING LINES

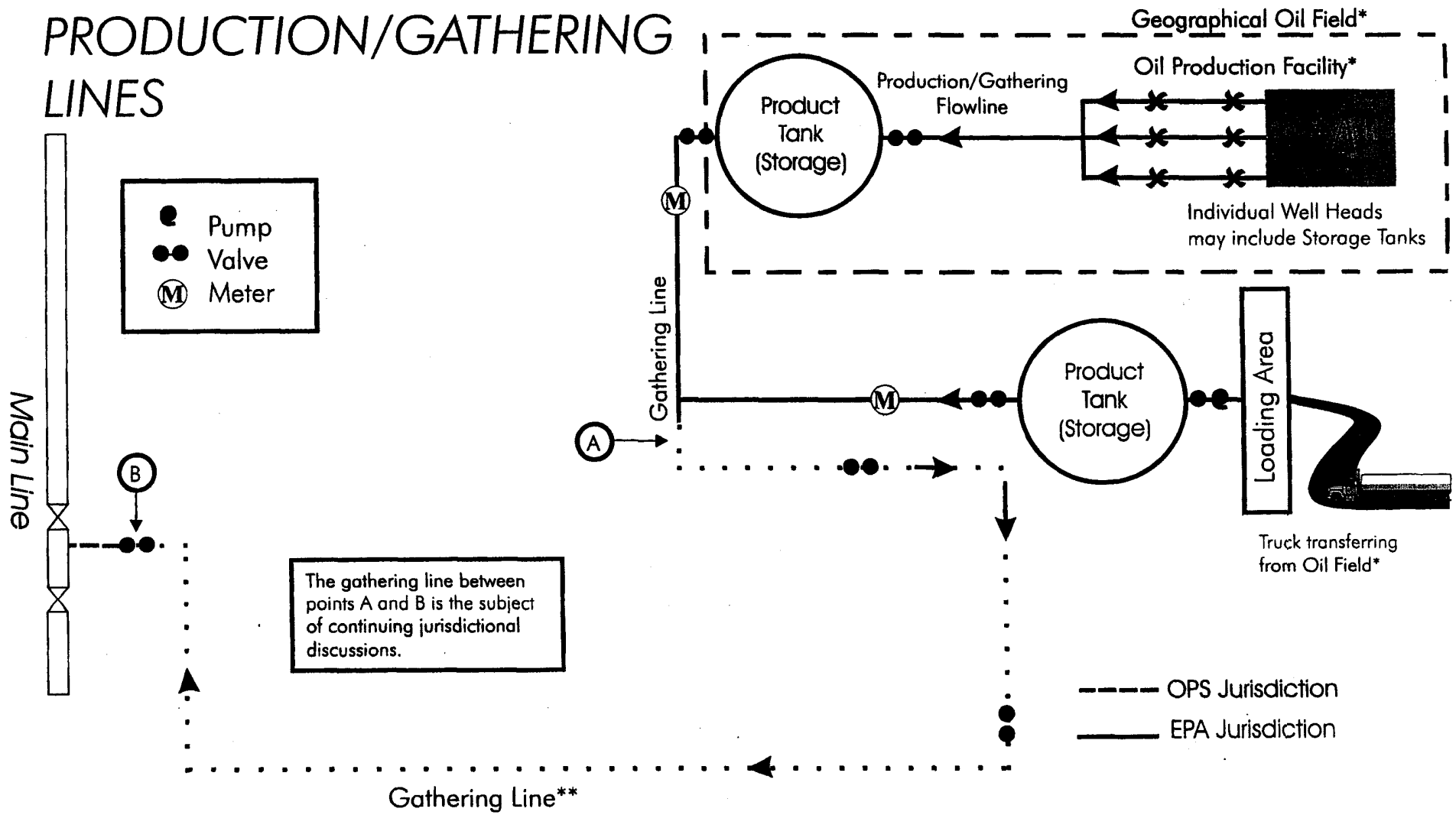

*In 40 CFR 112.1 and 112.7 EPA regulates onshore oil production facilities including wells, flowlines, separation equipment, storage facilities, gathering lines and auxiliary non-transportation-related equipment and facilities in a single geographical oil or gas field operated by a single operator.

**In 49 CFR 195 OPS does not regulate gathering lines (8 5/8 inch or less nominal outside diameter) that transports petroleum from a production facility in rural areas. See 49 CFR 195.1 and 195.2. The gathering line is subject to OPS response planning requirements in 49 CFR 194.

SOURCE: US EPA REV: 12/06/99

ATTACHMENT 8

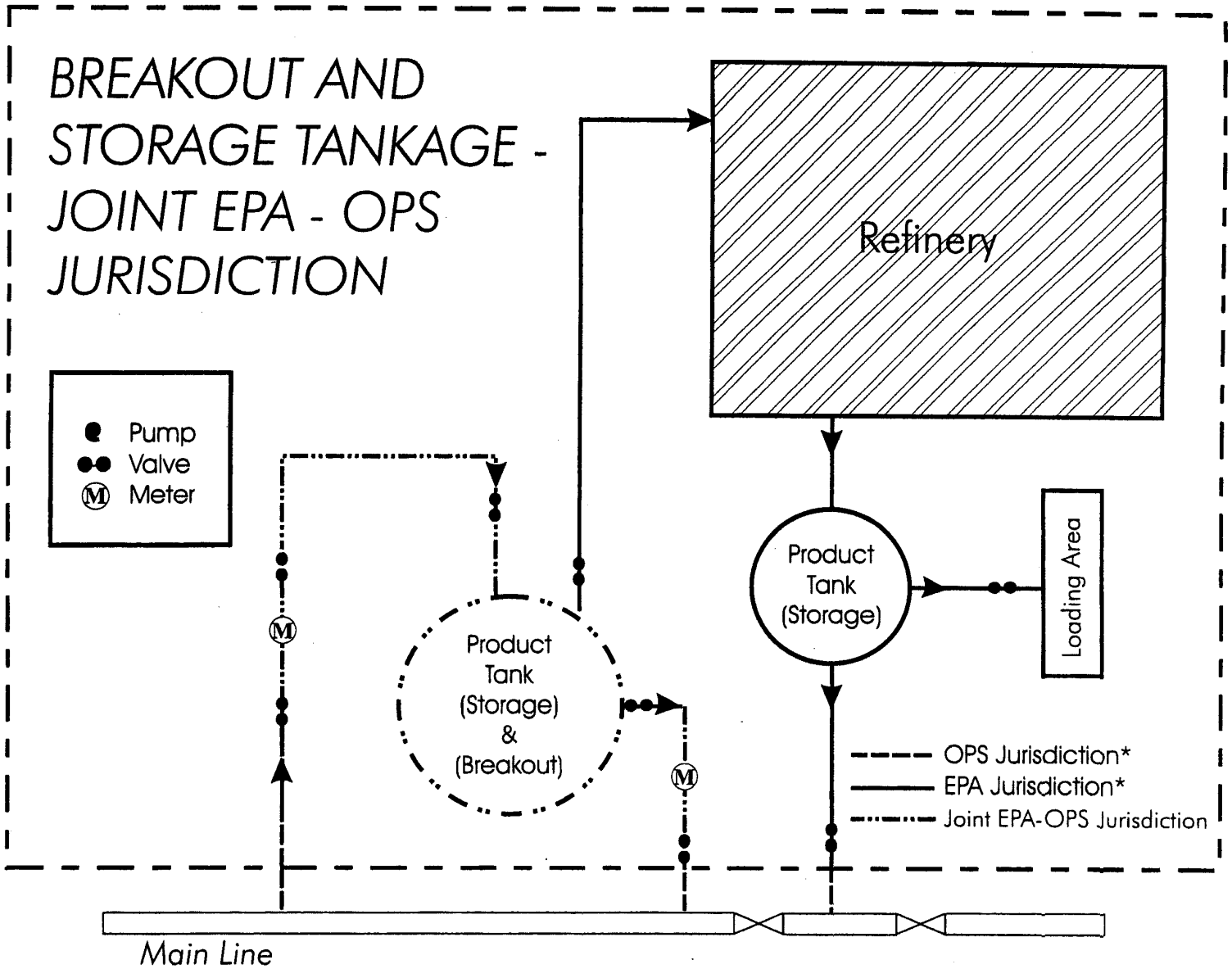

* This diagram does not identify the precise location where the change in jurisdiction occurs between EPA and OPS for the purpose of the Clean Water Act, Section 311(j) (33 USC 1321(j)). When the pipeline operator and the storage or breakout tank operator remain the same, the change in jurisdiction occurs at the first and last pressure influencing device, meter, valve, or isolation flange, at or inside the facility property. When the pipeline operator and the storage or breakout tank operator are not the same, the change in jurisdiction occurs at the change in operational responsibility or at the first and last pressure influencing device, valve, or isolation flange, at or inside the facility property. In either of the above situations, the location of the property line should not solely be used to determine jurisdiction when operational activities (loading/offloading) extend beyond the property line.

SOURCE: US EPA REV: 11/03/99

ATTACHMENT 9

EPA, OPS, AND COAST GUARD JURISDICTION AT A COMPLEX FACILITY

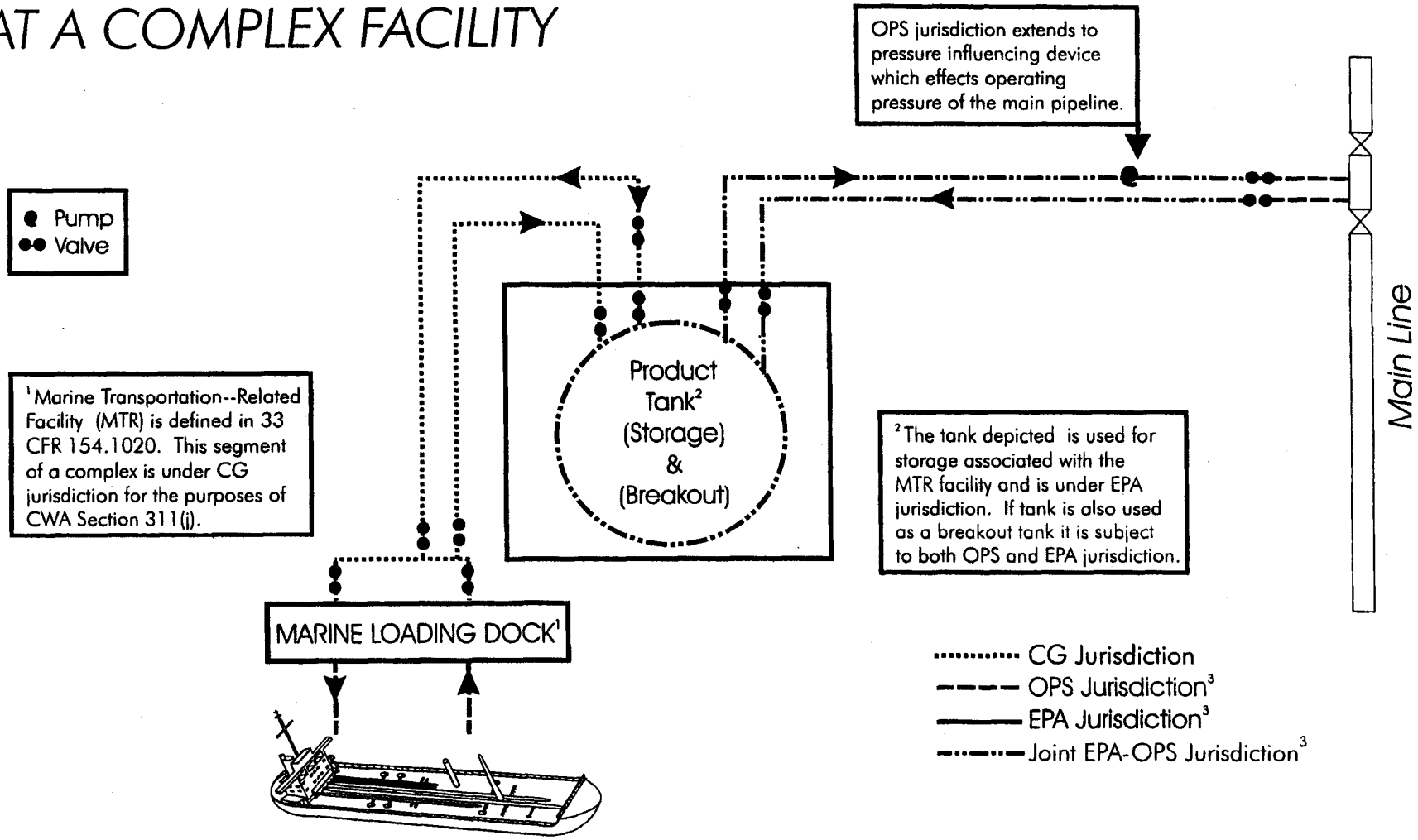

[3] This diagram does not identify the precise location where the change in jurisdiction occurs between EPA and OPS for the purpose of the Clean Water Act, Section 311(j) (33 USC 1321(j)). When the pipeline operator and the storage or breakout tank operator remain the same, the change in jurisdiction occurs at the first and last pressure influencing device, meter, valve, or isolation flange, at or inside the facility property line. When the pipeline operator and the storage or breakout tank operator are not the same, the change in jurisdiction occurs at the change in operational responsibility or at the first and last pressure influencing device, valve, or isolation flange, at or inside the facility property line. In either of the above situations, the location of the property line should not solely be used to determine jurisdiction when operational activities (loading/offloading) extend beyond the property line.

SOURCE: US EPA REV: 12/13/99

ATTACHMENT 10